PROJECT REPORT

Project Name: DISK SCHEDULING SYSTEM

Session:2023-2027

(Reg. No. 2023-UOK-03604, 2023-UOK-03612, 2023-UOK-03676)

Submitted To:

Mr. Mehtab Mushtaq

Subject: OPERATING SYSTEM

Submitted By:

Hammad Riaz (04), Manzar Shamim (12), Hassan Razzaq (76)

Date of Submission: January 29, 2026

Version 1.0

DEPARTMENT OF COMPUTER SCIENCE

FACULTY OF COMPUTING AND ENGINEERING

UNIVERSITY OF KOTLI AZAD JAMMU AND KASHMIR

DISK SCHEDULING SYSTEM

(Reg. No. 2023-UOK-03604, 2023-UOK-03612, 2023-UOK-03676)

Subject : Operating System

Session:2023-2027

Submitted By:

Hammad Riaz (04), Manzar Shamim (12), Hassan Razzaq (76)

Date of Submission: January 29, 2026

DEPARTMENT OF COMPUTER SCIENCE
FACULTY OF COMPUTING AND ENGINEERING
UNIVERSITY OF KOTLI AZAD JAMMU AND KASHMIR

Contents

1. Introduction 4
2. Project Objectives 4
2.1 GOALS: 5
3.Functional Requirements 5
3.1: User Input Handling 5
3.2. Algorithm Selection 5
3.3. Request Processing 5
3.4. Head Movement Calculation 5
3.5. Output Display 5
3.6. Algorithm Comparison 6
3.7. Error Handling 6
3.8. Reusability 6
3.9. Extensibility 6
3.10. Termination 6
4.NON-FUNCTIONAL REQUIREMENTS 6
5.INPUT REQUIREMENTS 6
5.1: Disk Request Queue 6
5.2: Initial Disk Head Position 7
5.3: Disk Size 7
5.4: Direction of Head Movement 7
6.Output Requirements 7
6.1: Disk Servicing Order 7
6.2: Total Head Movement 7
6.3: Individual Seek Movements 7
7. ASSUMPTIONS & CONSTRAINTS 7

1. Introduction

In an Operating System, secondary storage devices such as hard disks are used to store large amounts of data permanently. Since multiple processes may request disk access at the same time, the operating system must decide the order in which disk requests are serviced. This process is known as Disk Scheduling. The main objective of disk scheduling is to minimize disk head movement, reduce seek time, improve system throughput, and ensure efficient utilization of disk resources. Poor scheduling can lead to excessive disk head movement, increased access time, and degraded system performance. This project simulates various disk scheduling algorithms and allows users to observe and compare their performance.

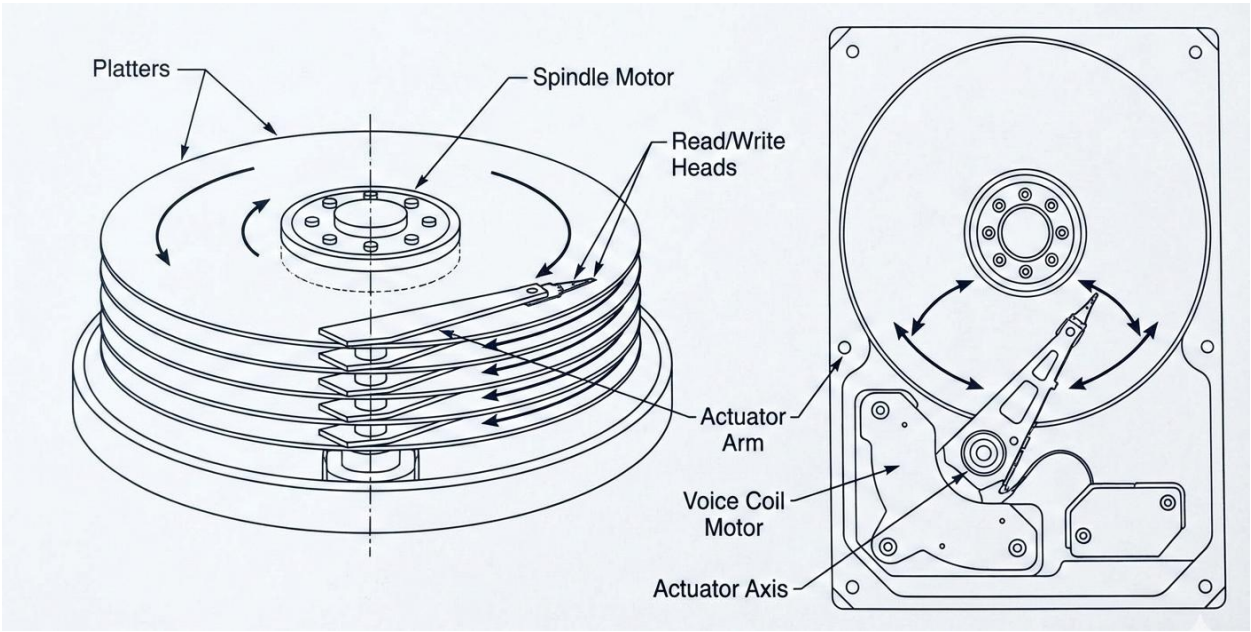

Figure 1: Hard Disk Structure & Disk Head Movement Diagram

2. Project Objectives

The main objective of this project is to understand the internal working of disk scheduling algorithms used in Operating Systems. This project aims to simulate real disk head movement to demonstrate how different scheduling techniques service disk I/O requests. By calculating and comparing the total seek time for each algorithm, the system helps analyze the performance differences among various disk scheduling methods. Additionally, this project is designed to provide an interactive and educational learning tool for Operating System students, enabling them to better visualize and comprehend disk scheduling concepts.

2.1 GOALS:

- To design and develop a disk scheduling simulator for educational purposes.
- To implement and demonstrate different disk scheduling algorithms including FCFS, SSTF, SCAN, C-SCAN, LOOK, and C-LOOK.
- To analyse disk head movement and seek time for each scheduling algorithm.
- To compare the performance of disk scheduling algorithms based on total head movement.
- To understand the working of disk scheduling techniques through simulation.
- To provide a simple, user-friendly system for learning Operating System concepts.
- To improve efficiency in servicing disk I/O requests by applying optimal scheduling strategies.

3.Functional Requirements

3.1: User Input Handling

- Disk request queue (list of track numbers)
- Initial disk head position
- Disk size (optional, for SCAN-type algorithms)
- Direction of head movement (left or right)

3.2. Algorithm Selection

- FCFS
- SSTF
- SCAN
- C-SCAN
- LOOK
- C-LOOK

3.3. Request Processing

- The system shall process disk requests according to the selected scheduling algorithm.
- The system shall determine the order in which disk requests are serviced.

3.4. Head Movement Calculation

- The system shall calculate the total disk head movement for each algorithm.
- The system shall calculate seek distance between consecutive disk requests.

3.5. Output Display

The system shall display:

- The order of disk head movement

- Total head movement
- Individuals seek operations
- The output shall be shown in a clear and readable format.

3.6. Algorithm Comparison

- The system shall allow comparison of multiple disk scheduling algorithms.
- The system shall show which algorithm gives minimum head movement for given input.

3.7. Error Handling

- The system shall validate user input.
- Invalid track numbers
- Empty request queue
- Head position outside disk range

3.8. Reusability

- The system shall allow repeated execution with different inputs without restarting the program.

3.9. Extensibility

- The system shall support adding new disk scheduling algorithms in the future.

3.10. Termination

- The system shall allow the user to exit the program safely.

4.NON-FUNCTIONAL REQUIREMENTS

- The system must be user-friendly and easy to operate.
- The system must run on Windows and Linux platforms.
- The system must provide accurate and reliable results.
- The system must handle up to 50 disk requests.
- The system must be easy to maintain and extend.

5.INPUT REQUIREMENTS

5.1: Disk Request Queue

- A list of disk track numbers requested by different processes.
- All track numbers must be non-negative integers.
- Example: 98, 183, 37, 122, 14, 124, 65, 67

5.2: Initial Disk Head Position

- The current position of the disk head before servicing requests.
- Must be within the valid disk range.
- Example: 53

5.3: Disk Size

- Total number of tracks on the disk.
- Required for SCAN and C-SCAN algorithms.
- Example: 200 tracks

5.4: Direction of Head Movement

- Direction in which the disk head initially moves.
- Possible values: Left or Right.
- Required for SCAN-based algorithms.

6.Output Requirements

6.1: Disk Servicing Order

- The sequence in which disk requests are serviced according to the selected algorithm.
- Example: 53 → 65 → 67 → 98 → 122 → 124 → 183

6.2: Total Head Movement

- Total distance moved by the disk head while servicing all requests.
- Displayed in number of tracks.

6.3: Individual Seek Movements

- Step-by-step movement of the disk head between consecutive requests.

7. ASSUMPTIONS & CONSTRAINTS

- All inputs are numeric and valid
- Disk head moves one track at a time
- System is for academic simulation only